Items	ER500-C1 ~ C2	ER500-C3 ~	E500-D1
Dimensions			
Overall Length	2 070 mm (81.5 in.)	←	←
Overall Width	730 mm (28.74 in.)	←	←
Overall Height	1 070 mm (42.13 in.)	←	←
Wheelbase	1 430 mm (56.3 in.)	←	←
Road Clearance	125 mm (4.92 in.)	←	←
Seat Height	800 mm (31.5 in.)	←	←
Dry Weight	179 kg (395 lb.)	←	←
Curb Weight:			
Front	92 kg (203 lb.)	←	←
Rear	107 kg (236 lb.)	←	←
Fuel tank Capacity	17 L (4.5 US gal.)	←	←
Performance			
Minimum Turning Radius	2.5 m (8.2 ft.)	←	←
Engine			
Type	4-stroke, DOHC, 2-cylinder	←	←
Cooling System	Liquid-cooled	←	←
Bore and Stroke	74.0 × 58.0 mm (2.91 × 2.28 in.)	←	←
Displacement	498 mL (30.39 cu in.)	←	←
Compression Ratio	9.8:1	←	←
Maximum Horsepower	37 kW (50.3 PS) @9 000 r/min (rpm)	←	25 kW (34 PS) @8 000 r/min (rpm)
Maximum Torque	45 N·m (4.6 kgf·m, 33 ft·lb) @7 200 r/min (rpm)	←	37 N·m (3.8 kgf·m, 27 ft·lb) @4 500 r/min (rpm)
Carburetion System	Carburetors, Keihin CVK34 × 2	←	←
Starting System	Electric starter	←	←
Ignition System	Battery and coil (transistorized)	←	←
Timing Advance	Electronically Advanced (digital)	←	←
Ignition Timing	From 10° BTDC @1 200 r/min (rpm) to 37.5° BTDC @10 000 r/min (rpm)	←	←
Spark Plugs	NGK DR9EA or ND X27ESR-U	←	←
Cylinder Numbering Method	Left to right, 1-2	←	←
Firing Order	1-2	←	←
Valve Timing:			
Inlet			
Open	31° BTDC	←	←
Close	51° ABDC	←	←
DuRation	262°	←	←
Exhaust			
Open	56° BBDC	←	←
Close	26° ATDC	←	←
DuRation	262°	←	←

Items	ER500-C1 ~ C2	ER500-C3 ~	ER500-D1
Lubrication System	Forced lubrication	←	←
Engine Oil:			
Grade	API SE, SF, SG or API SH or SJ with JASO MA	←	←
Viscosity	SAE10W-40	←	←
Capacity	3.4 L (3.6 us at)	←	←
Drive Train			
Primary Reduction System:			
Type	Chain	←	←
Reduction Ratio	2.652 (61/23)	←	←
Clutch Type	Wet multi disc	←	←
Transmission:			
Type	6-speed constant mesh, return shift	←	←
Gear Ratios:			
1st	2.571 (36/14)	←	←
2nd	1.722 (31/18)	←	←
3rd	1.333 (28/21)	←	←
4th	1.125 (27/24)	←	←
5th	0.961 (25/26)	←	←
6th	0.851 (23/27)	←	←
Final Drive System:			
Type	Chain drive	←	←
Reduction Ratio	2.470 (42/17)	←	←
Overall Drive Ratio	5.581 @Top gear	←	←
Frame			
Type	Tubular, double cradle	←	←
Caster (rake angle)	27°	←	←
Trail	102 mm (4.02 in.)	←	←
Front Tire:			
Type	Tubeless	←	←
Size	110/70-17 54H	110/70-17 M/C 54H	110/70-17 54H
Rear Tire:			
Type	Tubeless	←	←
Size	130/70-17 62H	130/70-17 M/C 62H	130/70-17 62H
Front Suspension:			
Type	Telescopic fork	←	←
Wheel Travel	125 mm (4.92 in.)	←	←
Rear Suspension:			
Type	Swingarm	←	←
Wheel Travel	114 mm (4.49 in.)	←	←
Brake Type:			
Front	Single disc	←	←
Rear	Drum	←	←

Classic Cycles Technical Resources

Items	ER500-C1 ~ C2	ER500-C3 ~	E500-D1
Electrical Equipment			
Battery	12 V 10 Ah	←	←
Headlight:			
Type	Semi-sealed beam	←	←
Bulb	12 V 60/55 W (quartz-halogen)	←	←
Tail/brake Light	12 V 5/21 W × 2	←	←
Alternator:			
Type	Three-phase AC	←	←
Rated output	17 A × 14 V @6 000 r/min (rpm)	←	←

Specifications subject to change without notice, and may not apply to every country.

Periodic Maintenance Chart

The scheduled maintenance must be done in accordance with this chart to keep the motorcycle in good running condition. **The initial maintenance is vitally important and must not be neglected.**

FREQUENCY	Whichever comes first ➡							* ODOMETER READING × 1 000 km (× 1 000 mile)	
INSPECTION	⬇ Every	1 (0.6)	6 (4)	12 (7.5)	18 (12)	24 (15)	30 (20)	36 (24)	Remarks
Throttle cable - inspect †		●		●		●		●	
Idle speed - inspect †		●		●		●		●	
Carburetor synchronization - inspect †				●		●		●	
Air cleaner element - clean† #				●		●		●	
Fuel hoses, connections - inspect †			●	●	●	●	●	●	
Coolant filter - clean	years								
Radiator hoses, connections - inspect †		●							
Air suction valve - inspect †			●	●	●	●	●	●	
Valve clearance - inspect †				●		●		●	before 2005 model
						●			after 2005 model
Clutch adjust - inspect †		●	●	●	●	●	●	●	
Tire wear - inspect †			●	●	●	●	●	●	
Drive chain wear - inspect †#			●	●	●	●	●	●	
Drive chain - lubricate #	600 km								
Drive chain slack - inspect †#	1000 km								
Brake Play - inspect †#		●	●	●	●	●	●	●	
Brake fluid level - inspect †	month	●	●	●	●	●	●	●	
Brake hoses, connections - inspect †			●	●	●	●	●	●	
Brake lining or pad wear - inspect †#			●	●	●	●	●	●	
Brake light switch - inspect †		●	●	●	●	●	●	●	
Front fork oil leak - inspect †				●		●		●	
Rear shock absorber oil leak - inspect †				●		●		●	
Swingarm pivot - lubricate				●		●		●	
Steering - inspect †		●	●	●	●	●	●	●	
Steering stem bearing - lubricate	2 years					●			
Spark plug - clean and gap †			●	●	●	●	●	●	
General lubrication - perform				●		●		●	
Nut, bolts, and fasteners tightness - inspect †		●		●		●		●	
Coolant - change	2 years					●			

Classic Cycles Technical Resources

FREQUENCY INSPECTION	Whichever comes first ➡ ⬇ Every	1 (0.6)	6 (4)	12 (7.5)	18 (12)	24 (15)	30 (20)	36 (24)	* ODOMETER READING × 1 000 km (× 1 000 mile) Remarks
Engine oil - change #	year	●	●	●	●	●	●	●	
Oil filter - replace		●		●		●		●	
Brake fluid - change	2 years					●			
Brake master cylinder cup and dust seal - replace	4 years								
Caliper piston seal and dust seal - replace	4 years								
Front Fork oil - change	2 years					●			

#: Service more frequently when operating in severe conditions; dusty, wet, muddy, high speed, or frequent starting/stopping.

*: For higher odometer readings, repeat at the frequency interval established here.

†: Replace, add, adjust, clean, or torque if necessary.

Torque and Locking Agent

Tighten all bolts and nuts to the proper torque using an accurate torque wrench. An insufficiently tightened bolt or nut may become damaged or fall off, possibly resulting in damage to the motorcycle and injury to the rider. A bolt or nut which is overtightened may become damaged, strip an internal thread, or break and then fall out. The following table lists the tightening torque for the major bolts and nuts, and the parts requiring use of a non-permanent locking agent or liquid gasket.

When checking the tightening torque of the bolts and nuts, first loosen the bolt or nut by half a turn and then tighten it to the specified torque.

Letters used in the "Remarks" column mean:

L: Apply a non-permanent locking agent to the threads.
LG: Apply liquid gasket to the threads.
Lh: Left-hand threads.
M: Apply molybdenum disulfide grease.
O: Apply an oil to the threads and seating surface.
R: Replacement parts.
S: Tighten the fasteners following the specified sequence.
SS: Apply silicone sealant to the threads.
St: Stake the fasteners to prevent loosening.

The table relating tightening torque to thread diameter, lists the basic torque for the bolts and nuts. Use this table for only the bolts and nuts which do not require a specific torque value. All of the values are for use with dry solvent-cleaned threads.

Classic Cycles Technical Resources

Basic Torque for General Fasteners

Threads dia. (mm)	Torque		
	N·m	kgf·m	ft·lb
5	3.4 ~ 4.9	0.35 ~ 0.50	30 ~ 43 in·lb
6	5.9 ~ 7.8	0.60 ~ 0.80	52 ~ 69 in·lb
8	14 ~19	1.4 ~1.9	10.0 ~ 13.5
10	25 ~ 34	2.6 ~ 3.5	19.0 ~ 25
12	44 ~ 61	4.5 ~ 6.2	33 ~ 45
14	73 ~ 98	7.4 ~ 10.0	54 ~ 72
16	115 ~ 155	11.5 ~ 16.0	83 ~ 115
18	165 ~ 225	17.0 ~ 23.0	125 ~ 165
20	225 ~ 325	23 ~ 33	165 ~ 240

Fastener	**Torque**			**Remarks**
	N·m	**kgf·m**	**ft·lb**	
Fuel System				
Fuel Tap Plate Screws	0.8	0.08	7 in·lb	
Fuel Tap Diaphragm Chamber Screws	1.0	0.10	9 in·lb	
Fuel Tap Mounting Bolts	2.5	0.25	22 in·lb	
Fuel Level Sensor Bolts	6.9	0.7	61 in·lb	
Cooling System				
Radiator Hose Clamp Screws	2.5	0.25	22 in·lb	
Fan Switch	18	1.8	13	
Thermostat Housing Bolts	11	1.1	95 in·lb	
Water Temperature Sensor	7.8	0.8	69 in·lb	SS
Water Pump Cover Bolts	11	1.1	95 in·lb	
Water Pump Shaft	25	2.5	18	Lh
Water Pump Impeller	9.8	1.0	87 in·lb	Lh

Fastener	Torque			Remarks
	N·m	kgf·m	ft·lb	
Water Pipe Bolts	9.8	1.0	87 in·lb	L
Cylinder Head Jacket Plug	9.8	1.0	87 in·lb	L
Air Suction Valve Cover Bolts	11	1.1	95 in·lb	
Coolant Drain Plug	11	1.1	95 in·lb	
Engine Top End				
Spark Plugs	14	1.4	10	
Cylinder Head Cover Bolts	9.8	1.0	87 in·lb	
Camshaft Cap Bolts	12	1.2	8.5	S
Rocker Shafts	39	4.0	29	
Valve Adjuster Locknuts	25	2.5	18	
Camshaft Sprocket Bolts	15	1.5	11	L
Cylinder Head Bolts (10 mm)	51	5.2	38	S
Cylinder Head Bolts (6 mm)	9.8	1.0	87 in·lb	S
Cam Chain Tensioner Mounting Bolts	11	1.1	95 in·lb	
Cam Chain Tensioner Cap Bolt	13	1.3	9.5	
Main Oil Pipe Upper Banjo Bolts M8	12	1.2	8.5	
Main Oil Pipe Lower Banjo Bolt M10	20	2.0	14.5	
Water Pipe Bolts	9.8	1.0	87 in·lb	L
Oil Pipe Bolts (in the cylinder head)	11	1.1	95 in·lb	
Oil Pipe Mounting Bolt	11	1.1	95 in·lb	
Clutch				
Oil Filler Plug	1.5	0.15	13 in·lb	
Clutch Hub Nut	132	13.5	98	
Clutch Spring Bolts	9.3	0.95	82 in·lb	
Clutch Cable Holder Bolt	11	1.1	95 in·lb	
Clutch Cover Bolts	11	1.1	95 in·lb	
Engine Lubrication System				
Oil Filler Plug	1.5	0.15	13 in·lb	
Oil Passage Plug	18	1.8	13	
Oil Filter Mounting Stud	25	2.5	18	L (Planted side)
Oil Filter (Cartridge Type)	17	1.75	12.5	
Oil Pipe for Balancer Shaft Banjo Bolt	20	2.0	14.5	
Oil Pipe for Drive Shaft Upper Banjo Bolt M6	7.8	0.8	69 in·lb	
Oil Pipe for Drive Shaft Lower Banjo Bolt M8	12	1.2	8.5	
Oil Pipe for Output Shaft Upper Banjo Bolt M6	7.8	0.8	69 in·lb	
Oil Pipe for Output Shaft Lower Banjo Bolt M8	12	1.2	8.5	
Oil Pipe for Output Shaft Mounting Bolt	11	1.1	95 in·lb	L
Oil Pump Pipe Mounting Bolts	11	1.1	95 in·lb	L
Relief Valve	15	1.5	11	L
Oil Pressure Switch Terminal Bolt	15	0.15	13 in·lb	
Oil Pressure Switch	15	1.5	11	SS

Fastener	Torque			Remarks
	N·m	kgf·m	ft·lb	
Engine Oil Drain Plug	29	3.0	22	
Oil Pan Mounting Bolts	11	1.1	95 in·lb	
Oil Pump Mounting Bolts	11	1.1	95 in·lb	
Breather Body Bolt	5.9	0.6	52 in·lb	
Engine Removal/Installation				
Downtube Bolts	44	4.5	33	
Engine Mounting Bolts and Nuts	44	4.5	33	
Engine Mounting Bracket Bolts	25	2.5	18	
Crankshaft/Transmission				
Crankcase Bolts (8 mm)	27	2.8	20	S
Crankcase Bolts (6 mm)	12	1.2	8.5	S
Upper Primary Chain Guide Mounting Nut	11	1.1	95 in·lb	L
Lower Primary Chain Guide Mounting Bolt	11	1.1	95 in·lb	L
Connecting Rod Big End Nuts	36	3.7	27	
Return Spring Pin	20	2.0	14.5	L
Gear Positioning Lever Pivot Stud	–	–	–	L (planted side)
Gear Positioning Lever Nut	11	1.1	95 in·lb	
Shift Pedal Mounting Bolt	12	1.2	8.5	
Shift Drum Bearing Holder Bolts	11	1.1	95 in·lb	L
Shift Drum Cam Pin Plate Screw	–	–	–	L
Engine Sprocket Nut	127	13	94	O
External Shift Mechanism Cover Bolts	11	1.1	95 in·lb	
Neutral Switch	15	1.5	11	
Wheels/Tires				
Front Axle Nut	88	9.0	65	
Front Axle Clamp Bolt	20	2.0	14.5	
Rear Axle Nut	98	10	72	
Final Drive				
Torque Link Nuts	34	3.5	25	
Engine Sprocket Nut	127	13	94	O
Rear Sprocket Nuts	59	6.0	43	
Rear Coupling Studs	–	–	–	L (planted side)
Engine Axle Nut	98	10	72	
Drive Chain Guide Bolts	11	1.1	95 in·lb	
Brakes				
Brake Hose Banjo Bolts	25	2.5	18	
Reservoir Cap Screws	1.5	0.15	13 in·lb	
Brake Lever Pivot Bolt	1.0	0.10	9 in·lb	
Brake Lever Pivot Locknut	5.9	0.60	52 in·lb	
Master Cylinder Clamp Bolts	8.8	0.9	78 in·lb	S

Classic Cycles Technical Resources

Fastener	Torque			Remarks
	N·m	kgf·m	ft·lb	
Front Brake Light Switch Mounting Screw	1.2	0.12	10 in·lb	
Caliper Mounting Bolts	34	3.5	25	
Caliper Bleed Valves	7.8	0.8	69 in·lb	
Brake Disc Mounting Bolts	27	2.8	20	L
Brake Pedal Bolt	8.8	0.9	78 in·lb	
Torque Link Nuts	34	3.5	25	
Brake Cam Lever Bolt	19	1.9	13.5	
Suspension				
Front Fork Upper Clamp Allen Bolts	20	2.0	14.5	
Front Fork Lower Clamp Allen Bolts	35	3.6	26	
Front Fork Bottom Allen Bolt	20	2.0	14.5	L
Front Axle Clamp Bolt	20	2.0	14.5	
Rear Shock Absorber Bolts and Nuts	34	3.5	25	
Swing Arm Pivot Nut	88	9.0	65	
Steering				
Handlebar Clamp Bolts	25	2.5	18	S
Handlebar Weight Allen Bolts	–	–	–	L
Handlebar Switch Housing Screws	3.4	0.35	30 in·lb	
Steering Stem Head Bolt	44	4.5	33	
Steering Stem Nut	Hand -Tighten (about 4.9)	Hand -Tighten (about 0.5)	Hand -Tighten (about 43 in·lb)	
Frame				
Tail Grip Bolts	25	2.5	18	
Footpeg Bracket Bolts	34	3.5	25	
Sidestand Bolt and Nut	44	4.5	33	
Center Stand Bolt and Nut	44	4.5	33	
Electrical System				
Pickup Coil Mounting Allen Bolts	8.3	0.85	74 in·lb	L
Timing Inspection Plug	2.5	0.25	22 in·lb	
Alternator Rotor Bolt Plug	1.5	0.15	13 in·lb	
Alternator Cover Bolts	11	1.1	95 in·lb	
Alternator Cover Allen Bolt	13	1.3	9.5	
Alternator Lead Clamp Screws	2.9	0.30	26 in·lb	
Spark Plug	14	1.4	10	
Alternator Stator Allen Bolts	12	1.2	8.5	
Alternator Rotor Bolt	69	7.0	51	
Starter Motor Mounting Bolts	11	1.1	95 in·lb	
Starter Chain Guide Screws	4.9	0.5	43 in·lb	L
Starter Motor Through Bolts	6.9	0.7	65 in·lb	
Starter Motor Terminal Nut	4.9	0.5	43 in·lb	
Starter Motor Lead Clamp Nut	4.9	0.5	43 in·lb	

Fastener	Torque			Remarks
	N·m	kgf·m	ft·lb	
Starter Clutch Allen Bolts	34	3.5	25	L
Sidestand Switch Mounting Screw	3.9	0.4	35 in·lb	L
Sidestand Mounting Bolt	44	4.5	33	
Starter Motor Terminal Locknut	6.9	0.70	61 in·lb	
Starter Relay Terminal Bolt	4.9	0.50	43 in·lb	
Headlight Body Screws	2.9	0.30	26 in·lb	
Handlebar Switch Housing Screws	3.4	0.35	30 in·lb	
Radiator Fan Switch	18	1.8	13	
Meter Reset Knob Screw	–	–	–	L
Water Temperature Switch	7.8	0.80	69 in·lb	SS
Oil Pressure Switch Terminal Bolt	1.5	0.15	13 in·lb	
Oil Pressure Switch	15	1.5	11	SS
Neutral Switch	15	1.5	11	
Tail Light Mounting Nut	5.9	0.6	52 in·lb	

Classic Cycles Technical Resources

Cable, Wire, and Hose Routing

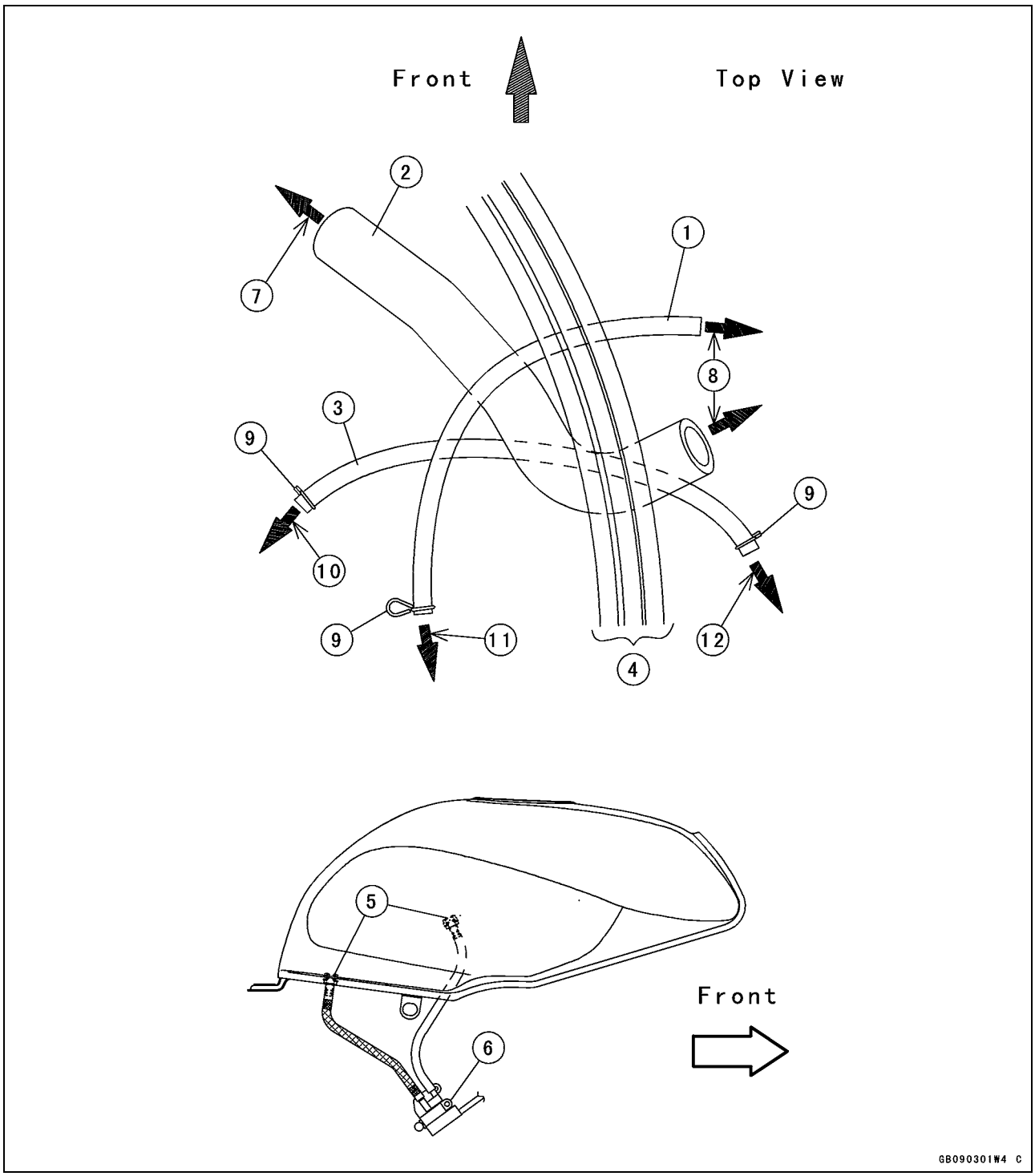

1. Vacuum Hose
2. Air Hose
3. Fuel Hose
4. Throttle and Choke Cables
5. Fuel Filters
6. Fuel Tap
7. To the air suction valve.
8. To the vacuum switch valve.
9. Clamp
10. To the fuel tap.
11. To the left carburetor.
12. To the right carburetor.

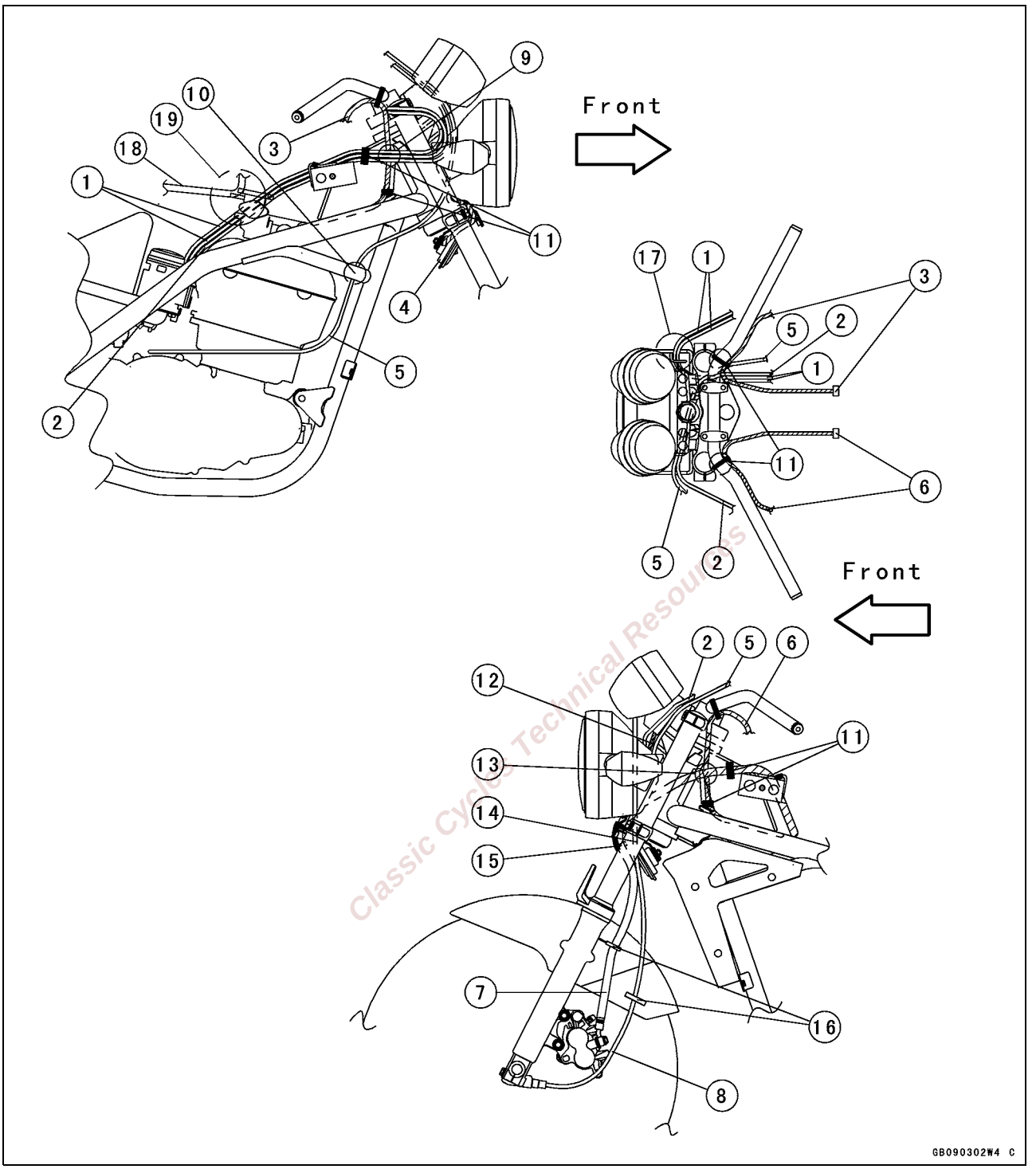

Classic Cycle Technical Resources

1. Throttle Cables
2. Choke Cable
3. Right Handlebar Switch Leads
4. Horn
5. Clutch Cable
6. Left Handlebar Switch Leads
7. Brake Hose
8. Speedometer Cable
9. Run the cables outside.
10. Run the clutch cable inside the cross pipe.
11. Bands
12. Run the ignition switch lead behind and then under the choke cable and above the clutch cable into the right hole of the headlight housing.
13. Run the main harness outside.
14. Run the meter cable inside the clamp
15. Clamp
16. Holders
17. Run the throttle cables through inside of the bracket.
18. Drain Hose
19. Run the drain hose above the throttle cable and choke cable at the fuel tank installation.

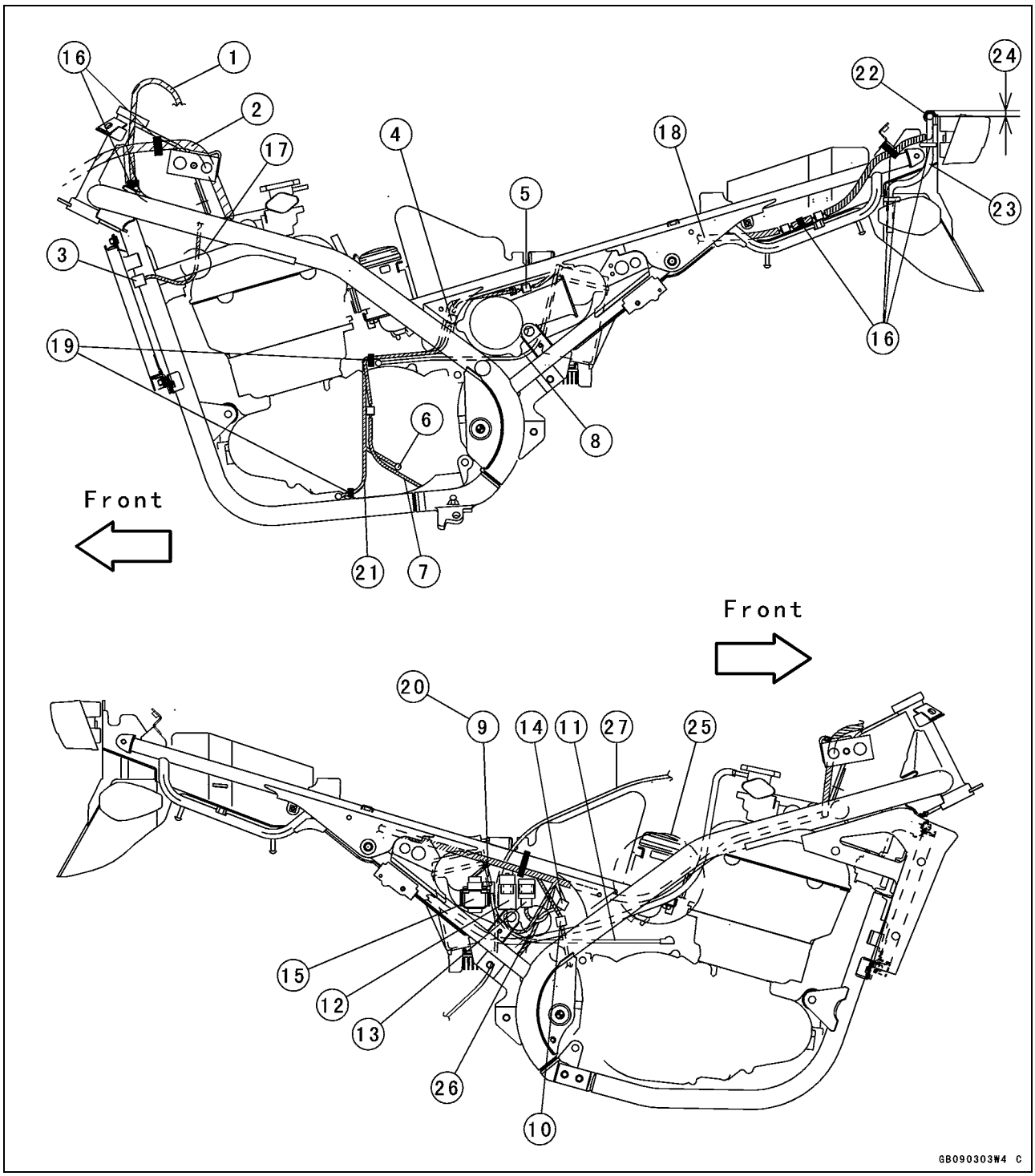

1. Handlebar Switch Harness
2. Main Harness
3. Radiator Fan Switch
4. Alternator Connector
5. Pickup Coil Connector
6. Neutral Switch Lead
7. Sidestand Switch Lead
8. Battery Negative Lead
9. Battery Positive Lead
10. Rear Brake Light Switch Connector
11. Starter Lead
12. Starter Circuit Relay
13. Turn Signal Relay
14. Regulator/rectifier Connector
15. Starter Relay
16. Bands
17. Run the leads inside the cross pipe.
18. Run the harness inside the frame.
19. Clamps
20. Run the lead under the starter lead.
21. Oil Pressure Switch Lead
22. Clamp
23. Radiator Reservoir Tank Hose
24. 5 mm (0.2 in.) or less
25. Run the harness over the cooling hose.
26. Run the regulator lead between the starter circuit relay lead and turn signal relay lead.
27. Cooling Hose

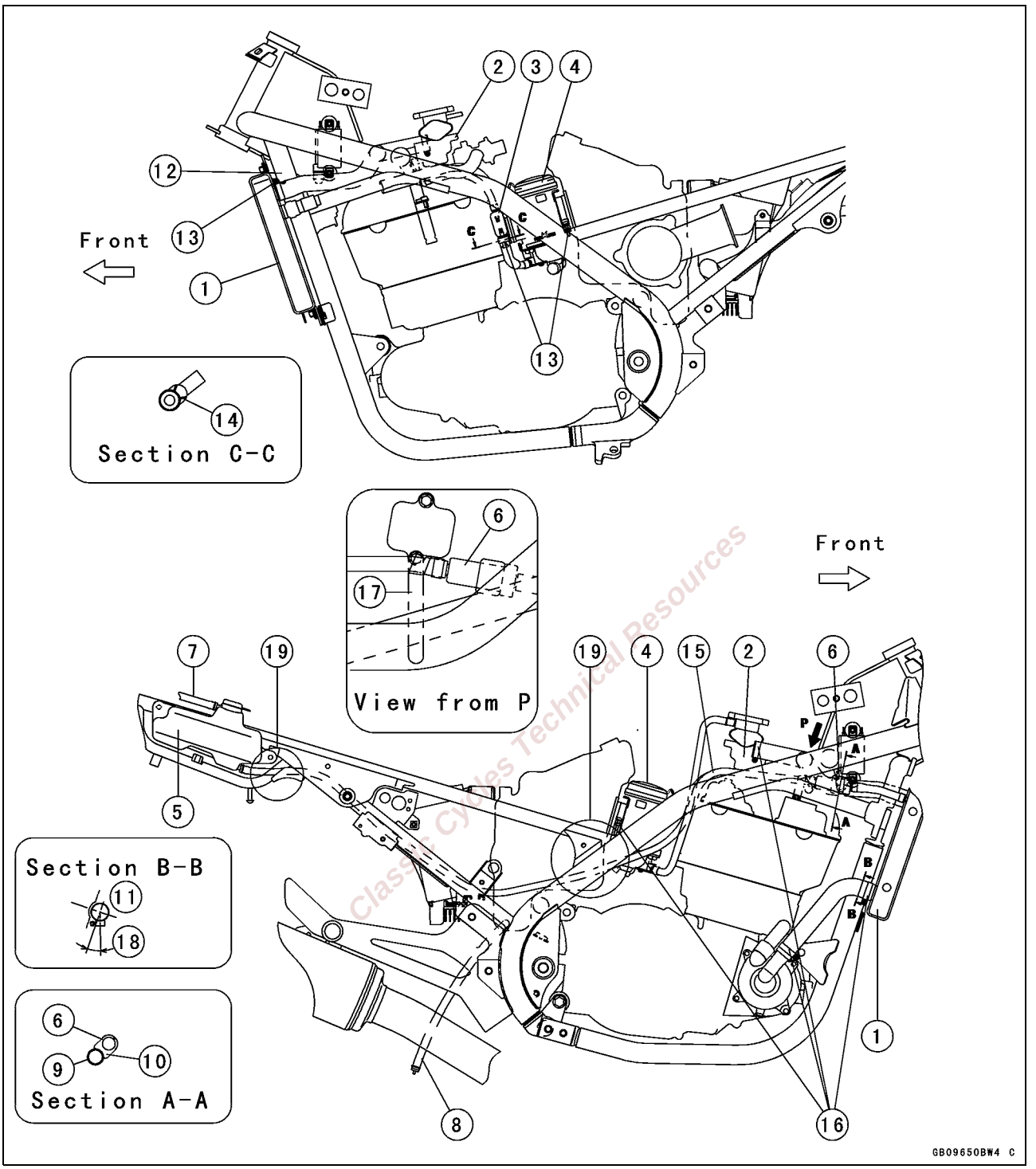

Classic Cycles Technical Resources

1. Radiator
2. Thermostat Housing
3. Coolant Filter
4. Carburetor
5. Reserve Tank
6. Coolant Valve
7. Reserve Tank Overflow Hose
8. Air Cleaner Drain Hose
9. Cross Pipe
10. Damper
11. Radiator Cover
12. Face the white mark upward and to the radiator.
13. Face the head of the clamp screw upward.
14. Place the clamp tab as shown.
15. Run the hose above the engine.
16. Face the head of the clamp screw as shown.
17. Clamp
18. About 20°
19. Run the hose inside of the frame.

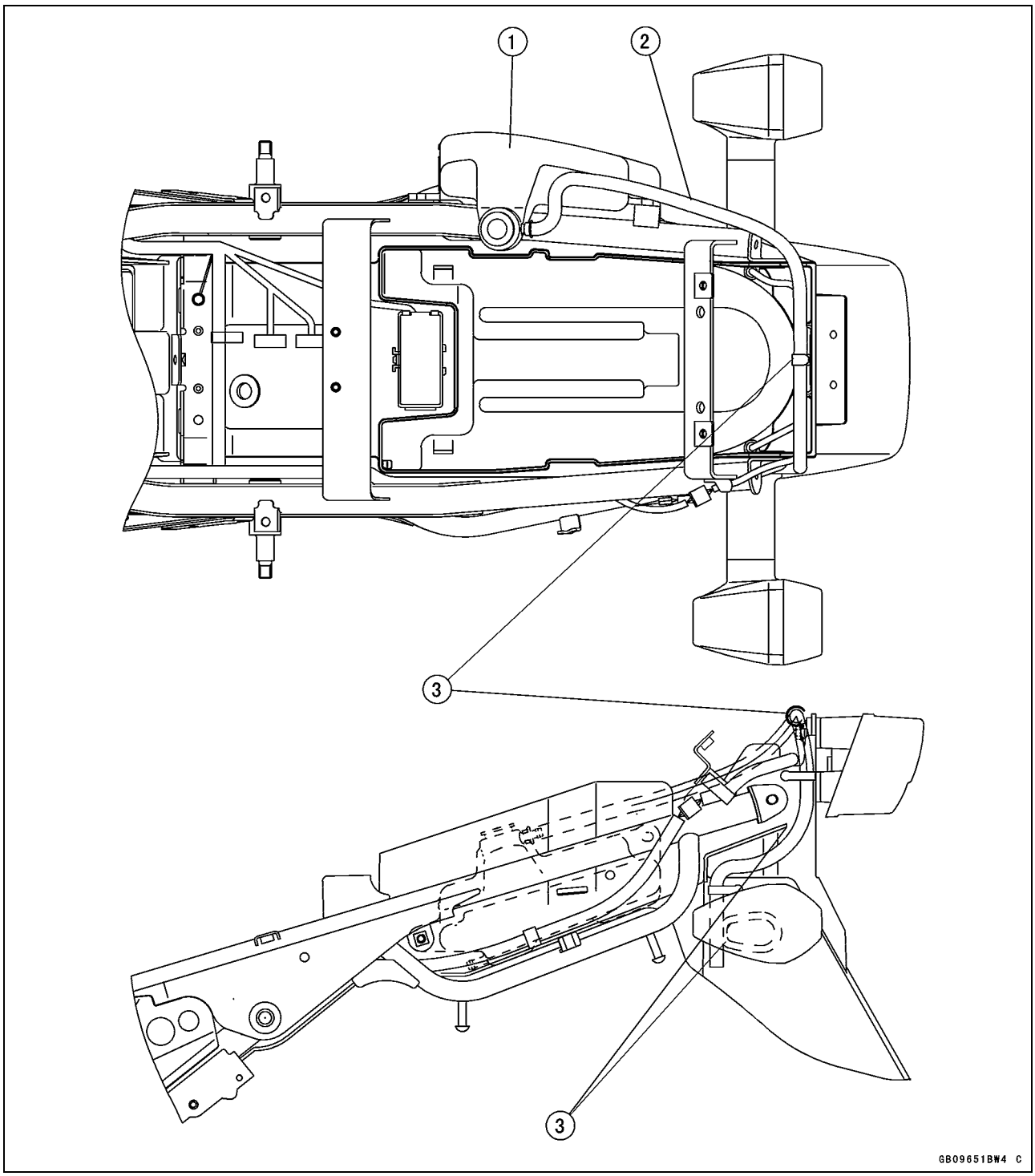

1. Reserve Tank
2. Reserve Tank Overflow Hose
3. Clamps

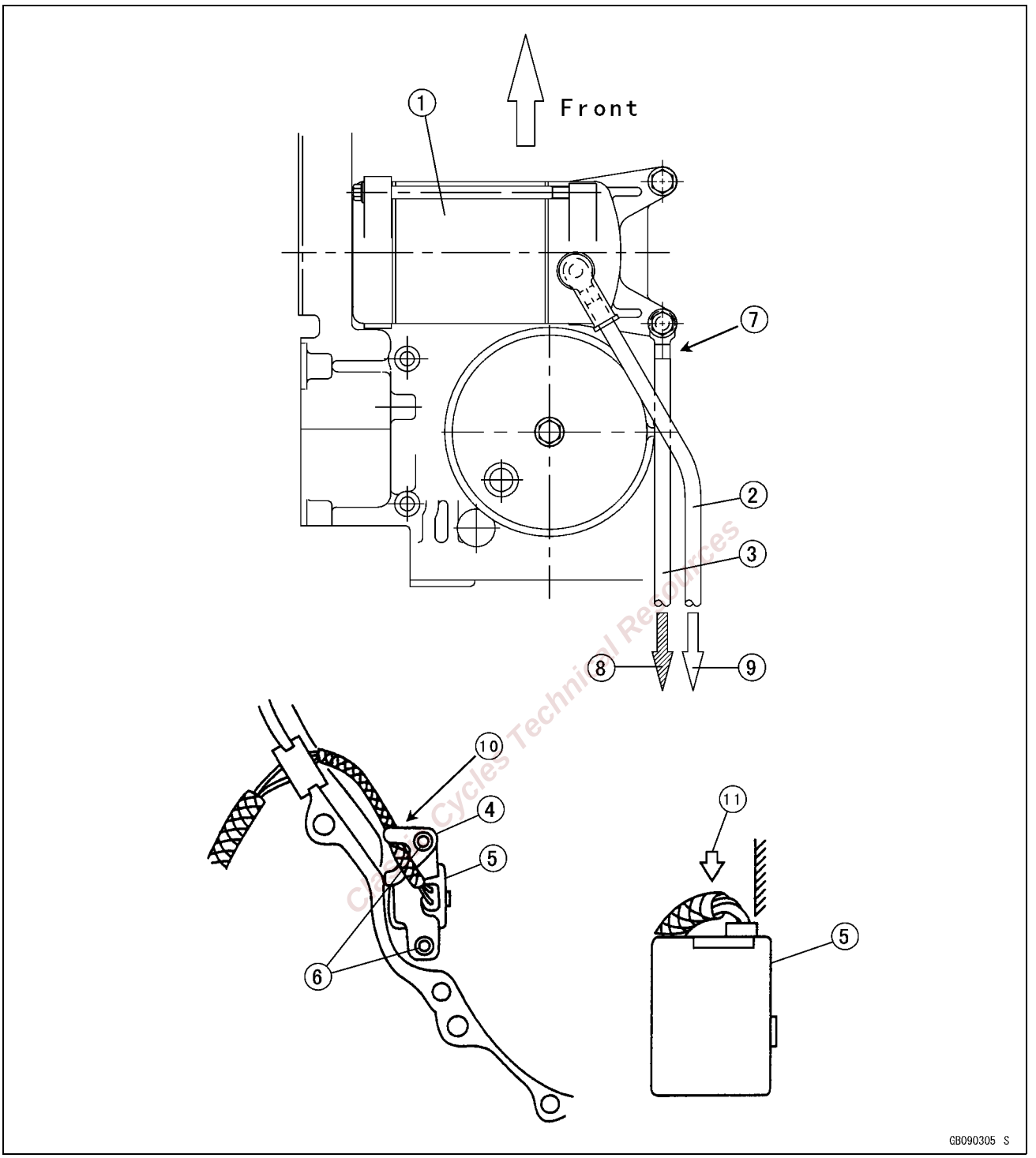

1. Starter Motor
2. Positive Lead
3. Negative Lead
4. Plate
5. Pickup Coil
6. Pickup Coil Mounting Bolts
7. Tighten the starter motor negative lead terminal with the rear starter mounting bolt.
8. To the battery negative terminal.
9. To the starter relay.
10. Hold the lead with the plate.
11. Bend and run the lead as shown so it does not touch the alternator rotor.

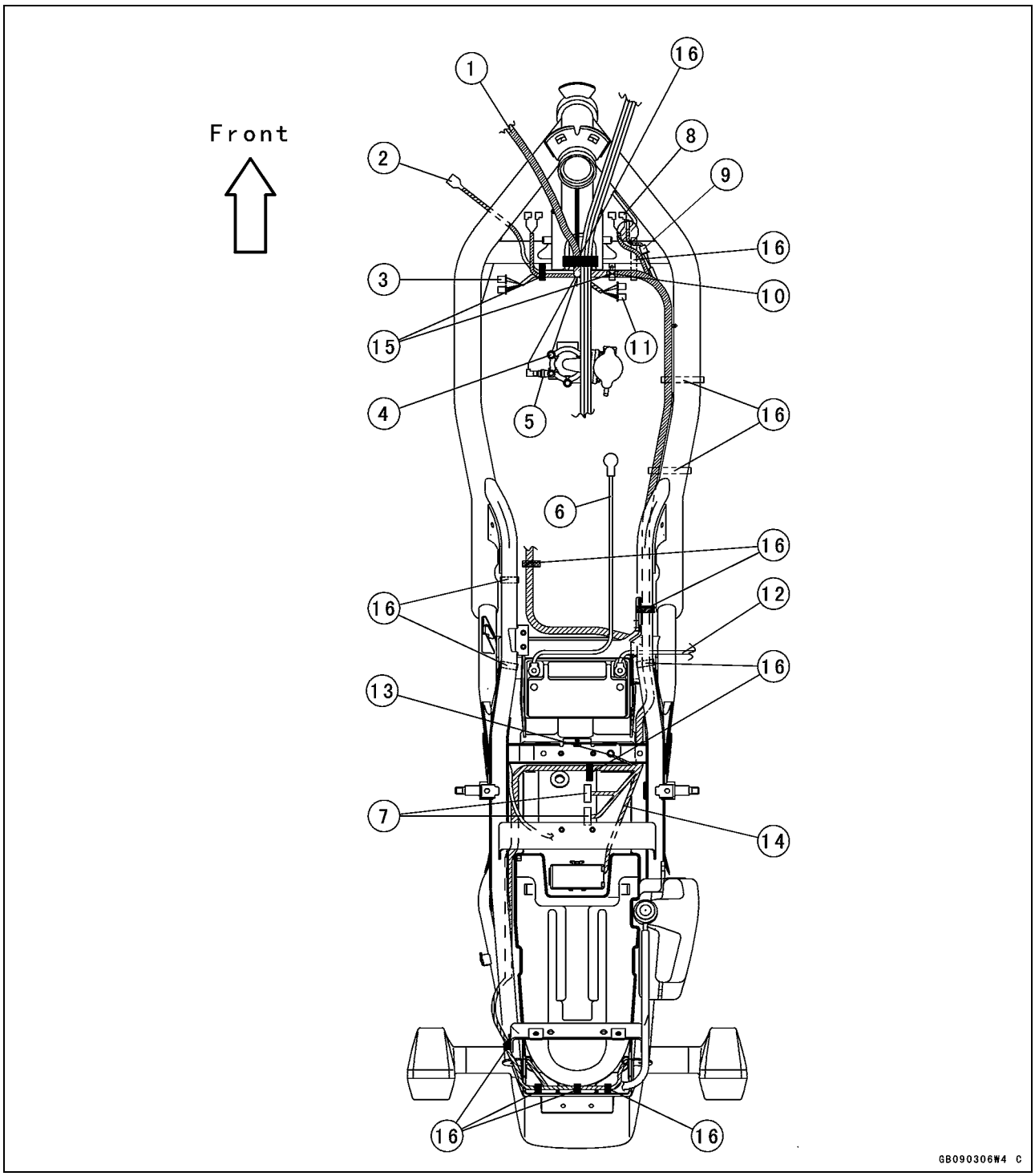

1. #1 Ignition Coil Connectors
2. Radiator Fan Switch Connector
3. Left Handlebar Switch Connectors
4. Water Temperature Switch Ground Terminal
5. Water Temperature Switch
6. Battery Negative Lead
7. Igniter Connectors
8. #2 Ignition Coil Connectors
9. Radiator Fan Connector
10. White Tape (position here)
11. Right Handlebar Switch Connectors
12. Battery Positive Lead
13. Ground Terminal
14. Fuse Box Lead
15. Fit the bands into gusset.
16. Bands

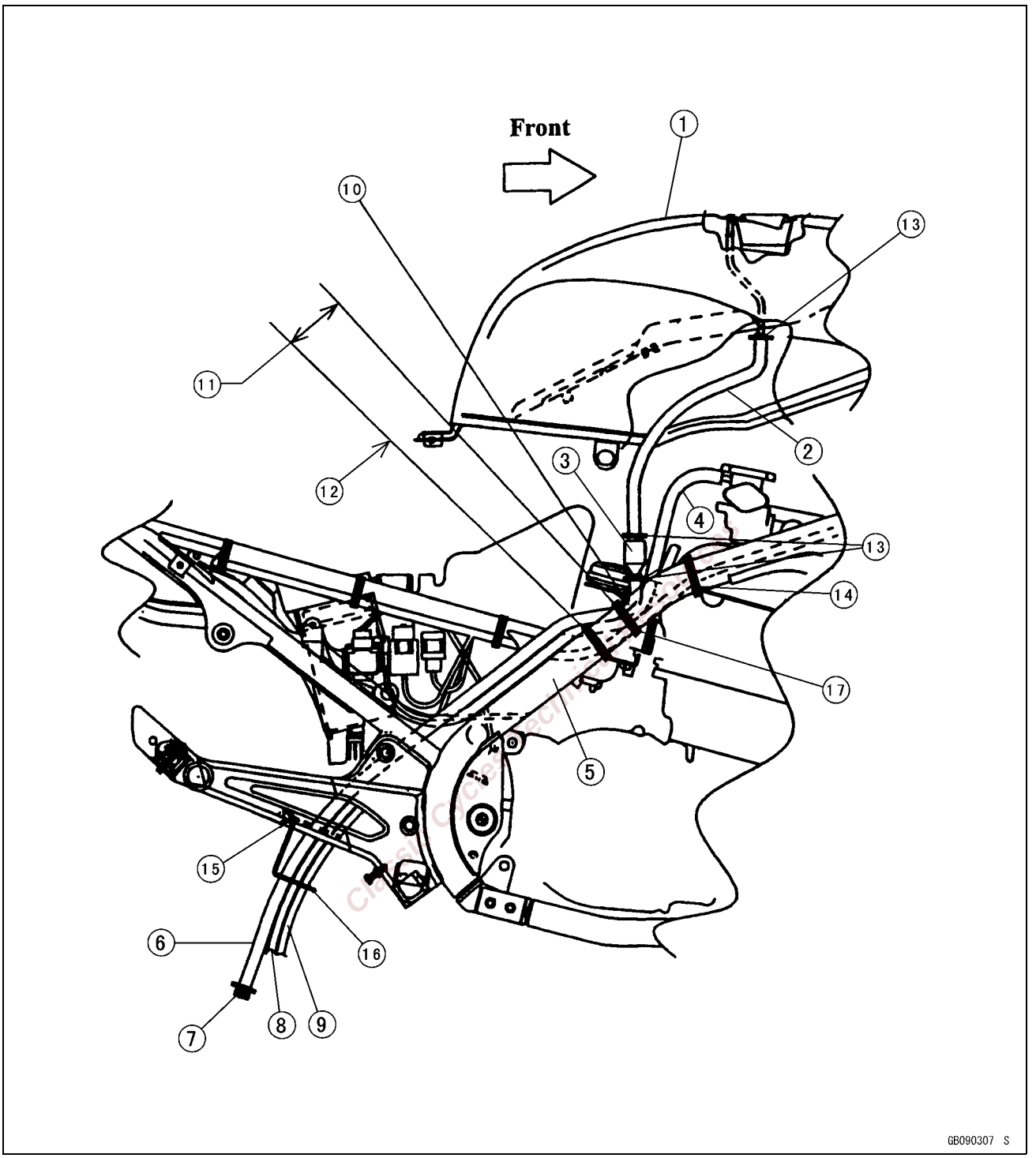

1. Fuel Tank
2. Fuel Tank Upper Drain Hose
3. Catch Tank
4. Reserve Tank Hose
5. Main Harness
6. Fuel Tank Lower Drain Hose
7. Plug
8. Reserve Tank Overflow Hose
9. Air Cleaner Drain Hose
10. Bind the edge of the hose bend
11. About 70 mm
12. Frame Corner
13. Clips
14. Band
15. Bolt
16. Holder
17. Bolt (Bind [4],[5],[6])

KAWASAKI PARTS & ACCESSORIES

Click on links below

Kawasaki ER500 Original Equipment Parts & Complete Online Diagrams

Kawasaki ER500 Model History & Technical Specifications

Motorcycle Helmet Closeout Sale

Kawasaki Motorcycle Parts & Accessories

Kawasaki Dirt Bike Parts & Accessories

Save On All Motorcycle Tires

Motorcycle Gear Closeout Sale

High Visibility Motorcycle Gear

Cycle Gear – Free Shipping

Free Shipping On All Motorcycles

Discount Auto Parts – Free Shipping